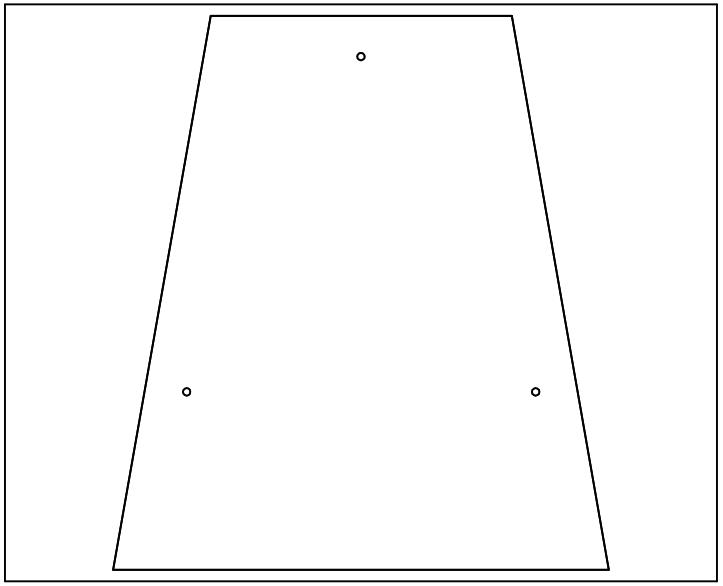

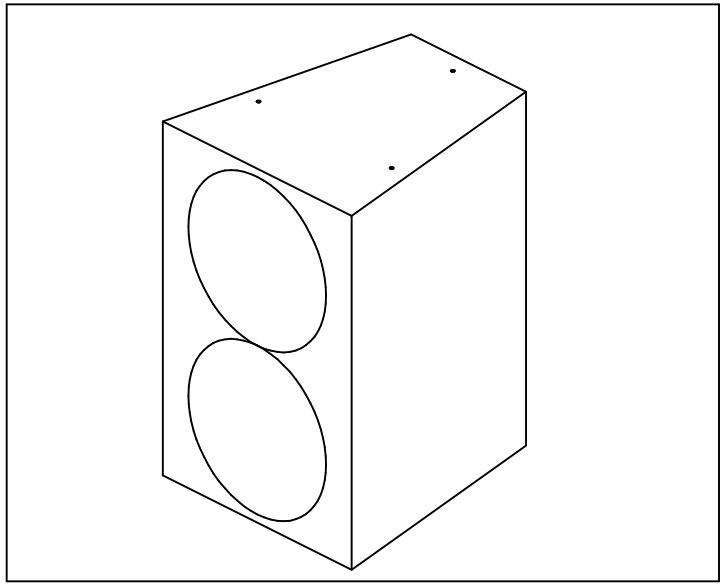

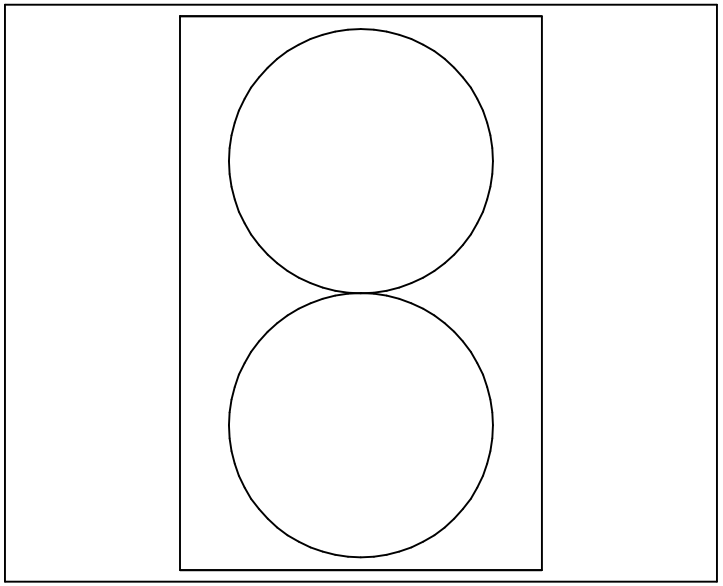

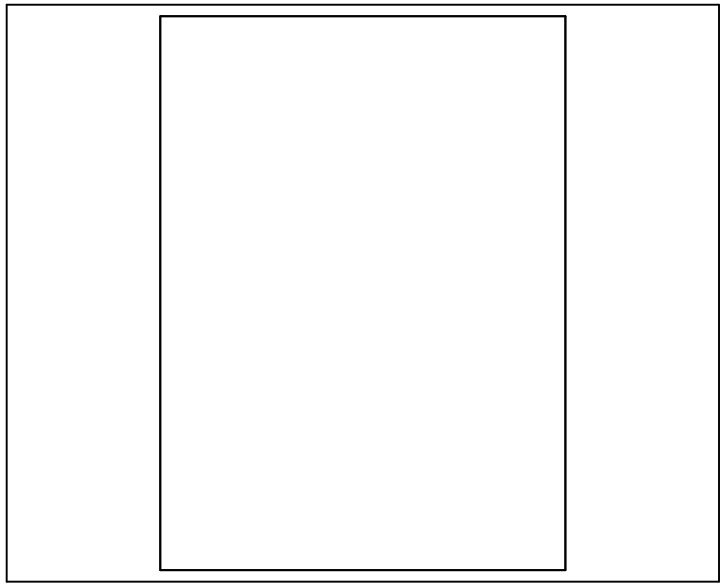

PART NUMBER LIST

REV	DESCRIPTION	DATE	BY
A	RELEASE: ECO #2607	11/13/98	G.L.

UNLESS OTHERWISE SPECIFIED DIMENSIONS ARE IN INCHES
TOLERANCES ARE:
DECIMALS .XX± .01 .XXX±.005
ANGLES ±0° 30'

	INTL.	DATE
DRAWN	R.H.	11/98
CHECK		
DESIGN		
ENG		
APPROV		
APPROV		

REF DWG: D00801-A.DWG

DO NOT SCALE DRAWING

REMOVE AND REMOVE SHARP EDGES

NEXT ASSY. | USED ON

APPLICATION

RENKUS-HEINZ, Inc.

TITLE: SPEAKER VIEWS, CELF15-2

SIZE	CODE IDENT	DWG NO.	REV
D		EEE-CELF15-2	A

SCALE NONE | WEIGHT | SHEET 1 OF 1

THE MATERIAL CONTAINED HEREIN IS PROPRIETARY TO RENKUS-HEINZ AND SHALL NOT BE REPRODUCED DISCLOSED OR USED FOR ANY OTHER PURPOSE WITHOUT THE WRITTEN APPROVAL OF RENKUS-HEINZ.