Fly-Track Option

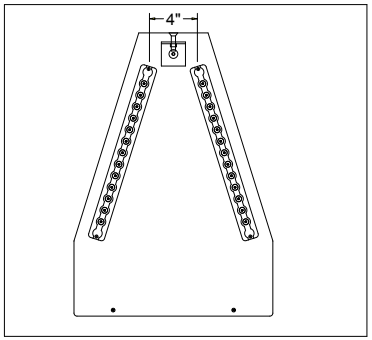

R-Hang Option

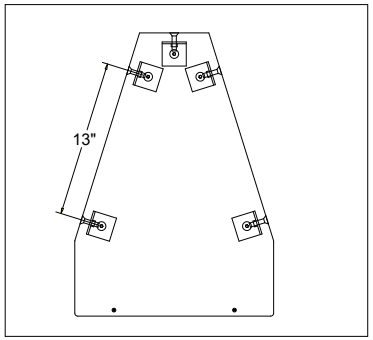

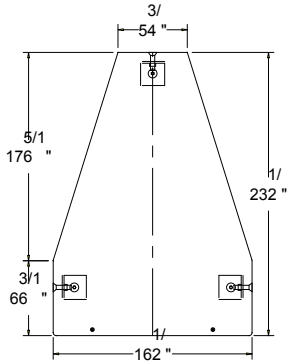

STX Options

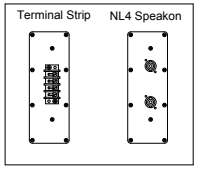

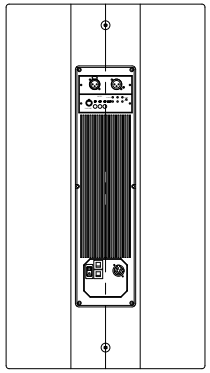

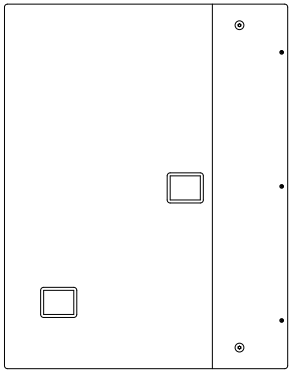

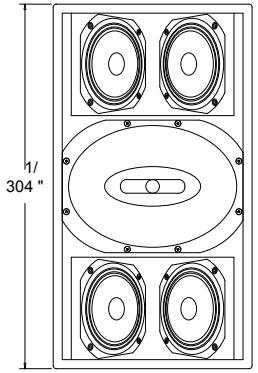

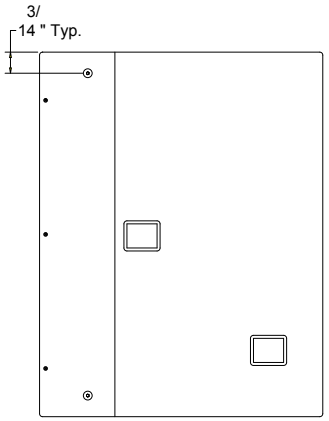

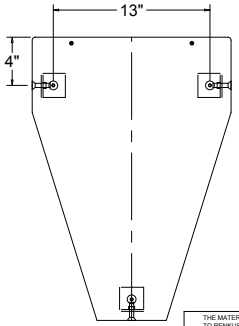

Notes:

Attachment point locations are approximate. Design attachment plates with slotted holes for

DRAWING APPLIES TO
STX4/44, STX4/64, STX4/94, ST4/44, ST4/64, ST4/94

REV	DESCRIPTION	DATE	BY

UNLESS OTHERWISE SPECIFIED
DIMENSIONS ARE IN INCHES
TOLERANCES ARE:
DECIMALS .XX± .01 .XXX± .005
ANGLES ±0= 30"

	INTL	DATE
DRAWN	C.R.	7/04
CHECK		
DESIGN		
ENG		
APPROV		
APPROV		
REF DWG:	ST4_STX4	
	DO NOT SCALE DRAWING	

NEXT ASSY | USED ON
APPLICATION

THE MATERIAL CONTAINED HEREIN IS PROPRIETARY TO RENKUS-HEINZ AND SHALL NOT BE REPRODUCED, DISCLOSED, OR USED FOR ANY OTHER PURPOSE WITHOUT THE WRITTEN APPROVAL OF RENKUS-HEINZ.

RENKUS-HEINZ, inc.

TITLE: Speaker Assembly
STX4, ST4

SIZE	CODE IDENT	DWG NO.	REV
C		NOT RELEASED	A
SCALE 1 = 10	WEIGHT	SHEET 1 OF 1	