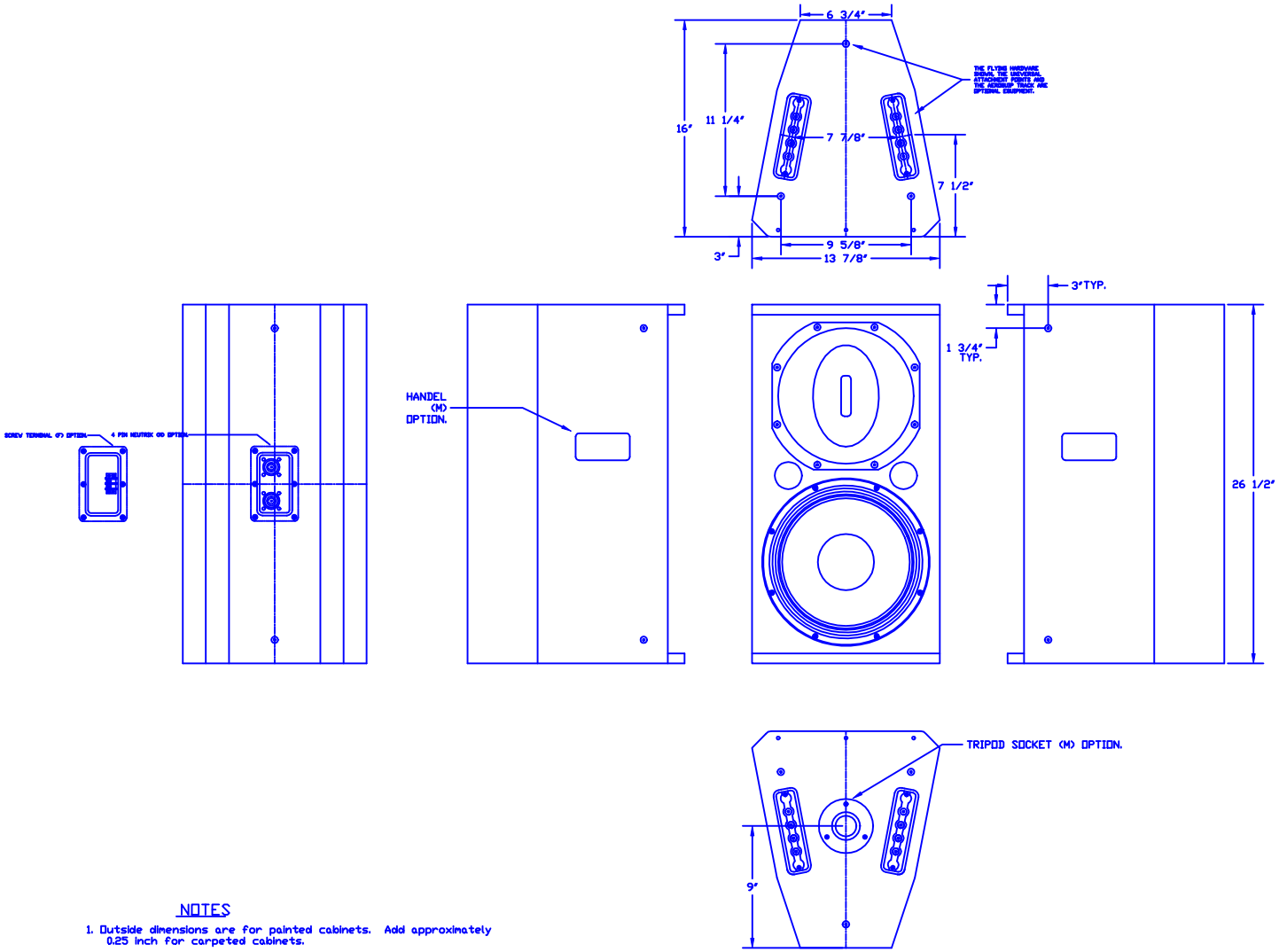

NOTES

1. Outside dimensions are for painted cabinets. Add approximately 0.25 inch for carpeted cabinets.
2. Attachment point locations are approximate. Design attachment plates with slotted holes for adjustability.

PART NUMBER LIST

REV	DESCRIPTION	DATE	BY
A	RELEASE: ECO #2019	6/25/97	G.L.

UNLESS OTHERWISE SPECIFIED DIMENSIONS ARE IN INCHES
TOLERANCES ARE:
DECIMALS .XX± .01 .XXX±.005
ANGLES ±0° 30'

	INTL.	DATE
DRAWN	P.R.	6/97
CHECK	G.L.	6/97
DESIGN		
ENG		
APPROV	BRO	6/97
APPROV		
REF DWG	D00517-A.DWG	
	DO NOT SCALE DRAWING	
	DEBURR AND REMOVE SHARP EDGES	

NEXT ASSY. | USED ON
APPLICATION

RENKUS-HEINZ, Inc.

TITLE
SR5/6 & SR5/9

SIZE D | CODE IDENT | DWG NO. 600-SPKRASMSR5 | REV A
SCALE 1 = 4 | WEIGHT | SHEET 1 OF 1

THE MATERIAL CONTAINED HEREIN IS PROPRIETARY TO RENKUS-HEINZ AND SHALL NOT BE REPRODUCED DISCLOSED OR USED FOR ANY OTHER PURPOSE WITHOUT THE WRITTEN APPROVAL OF RENKUS-HEINZ.