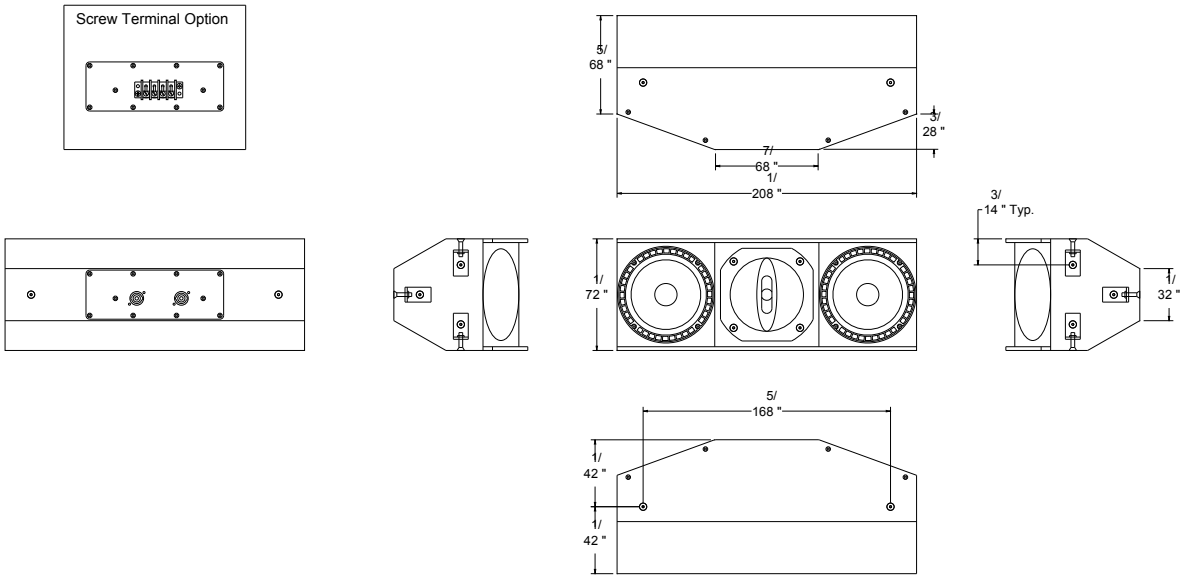

Notes:

Attachment point locations are approximate. Design attachment plates with slotted holes for

DRAWING APPLIES TO
TRX62H, TRX62HW

REV	DESCRIPTION	DATE	BY

UNLESS OTHERWISE SPECIFIED
DIMENSIONS ARE IN INCHES
TOLERANCES ARE:
DECIMALS .XX± .01 .XXX± .005
ANGLES ±0= 30'

	INTL	DATE
DRAWN	P.R. / C.R.	8/04
CHECK		
DESIGN		
ENG		
APPROV		
APPROV		
REF DWG.	TRX62H.dxf	
NEXT ASSY.	USED ON	DO NOT SCALE DRAWING
APPLICATION		

RENKUS-HEINZ, inc.

TITLE: Speaker Assembly TRX62H

SIZE	CODE IDENT	DWG NO.	REV
C		NOT RELEASED	A
SCALE 1 = 8	WEIGHT	SHEET 1 OF 1	

THE MATERIAL CONTAINED HEREIN IS PROPRIETARY TO RENKUS-HEINZ AND SHALL NOT BE REPRODUCED, DISCLOSED, OR USED FOR ANY OTHER PURPOSE WITHOUT THE WRITTEN APPROVAL OF RENKUS-HEINZ.