C:\Documents and Settings\par\Desktop\ICL-F PICTURES\D03734-B.dxf, 8/17/2009 2:22:36 PM

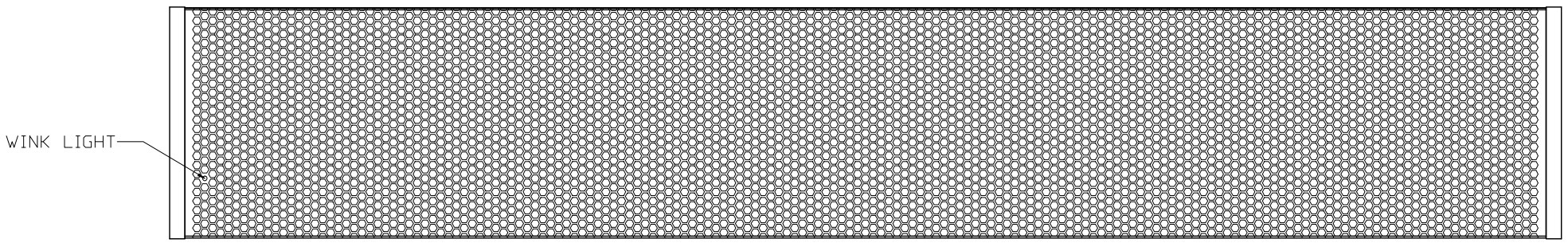

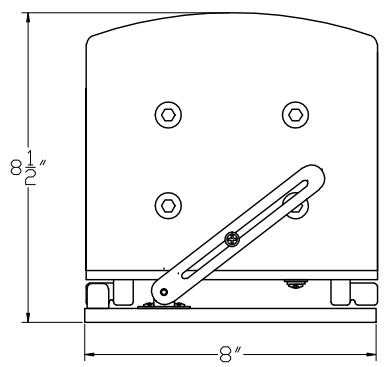

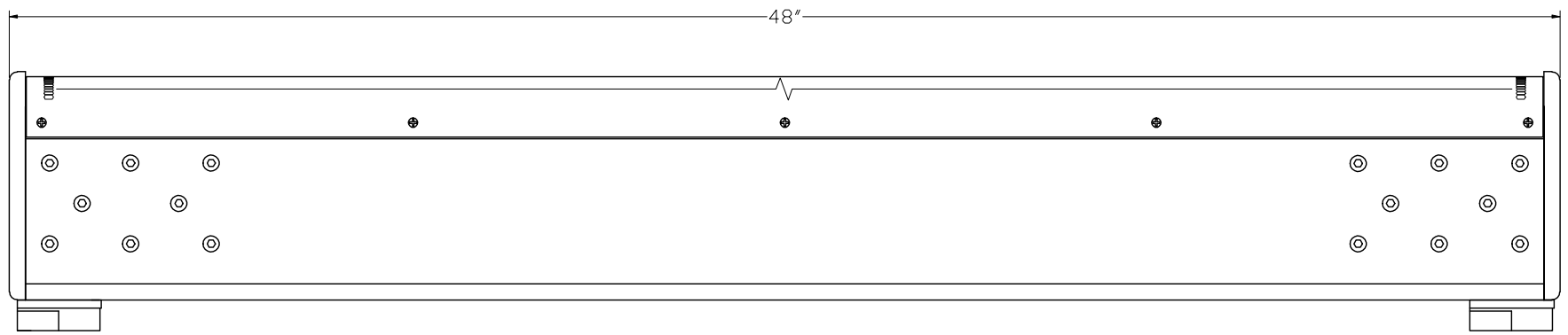

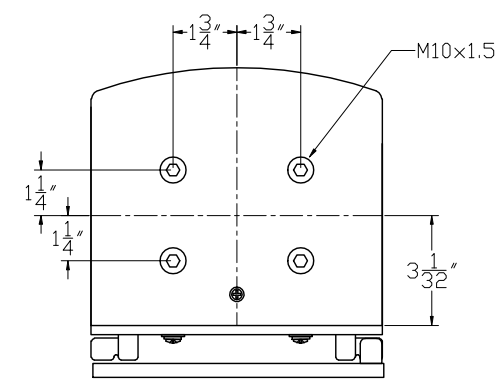

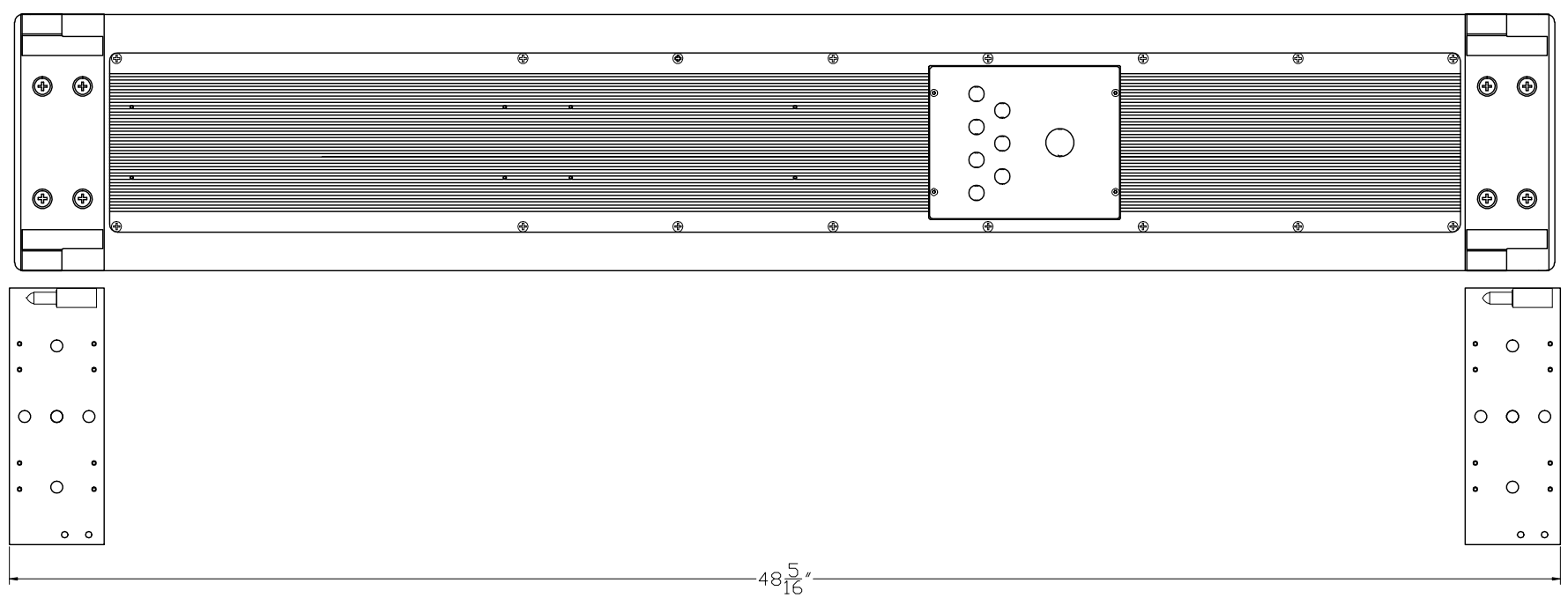

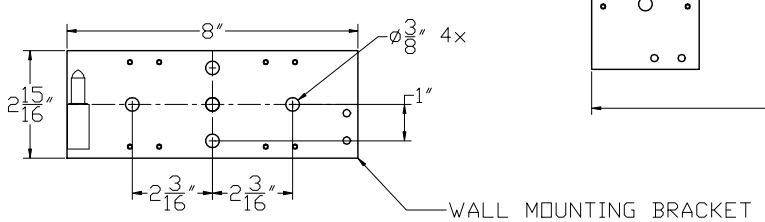

PART NUMBER LIST	

REV	DESCRIPTION	DATE	BY

UNLESS OTHERWISE SPECIFIED DIMENSIONS ARE IN INCHES TOLERANCES ARE: DECIMALS .XX± .01 .XXX±.005 ANGLES ±0° 30′

	INTL	DATE
DRAWN	P.R.	7/23/09
CHECK		
DESIGN		
ENG		
APPROV		
APPROV		

REF DWG: D03734-B.DWG

NEXT ASSY. | USED ON

APPLICATION

DO NOT SCALE DRAWING

BREAK AND REMOVE SHARP EDGES

RENKUS-HEINZ, Inc.

TITLE: MODEL ICL-F

SIZE D4 | CODE IDENT | DWG NO. EEE-ICL-F | REV B

SCALE 1 = 1 | WEIGHT | SHEET 1 OF 1

THE MATERIAL CONTAINED HEREIN IS PROPRIETARY TO RENKUS-HEINZ AND SHALL NOT BE REPRODUCED DISCLOSED OR USED FOR ANY OTHER PURPOSE WITHOUT THE WRITTEN APPROVAL OF RENKUS-HEINZ.